KOMATSU

PC138US-11

EU Stage IV Engine

PC138

HYDRAULIC EXCAVATOR

ENGINE POWER
72,6 kW / 97,3 HP @ 2.050 rpm

OPERATING WEIGHT
13.880 - 14.820 kg

BUCKET CAPACITY
max. 0,72 m³

Walk-Around

PC138US-11

ENGINE POWER
72,6 kW / 97,3 HP @ 2.050 rpm

OPERATING WEIGHT
13.880 - 14.820 kg

BUCKET CAPACITY
max. 0,72 m³

EXCEPTIONAL WORKABILITY AND ENVIRONMENTAL PERFORMANCE

Powerful and Environmentally Friendly

- EU Stage IV engine
- Adjustable idle shutdown
- Komatsu fuel-saving technology
- 100% passive regeneration and requires no DPF

Total versatility

- Ideal for a wide range of applications
- Short tail swing and exceptional stability
- 6 working modes
- Wide choice of options

First-Class Comfort

- Fully air-suspended operator station
- Low-noise design
- Widescreen monitor

Safety First

- Komatsu SpaceCab™
- Improved camera system
- KomVision surround view system (option)
- Neutral position detection system

KOMTRAX™

- Komatsu Wireless Monitoring System
- 3G mobile communications
- Integrated communication antenna
- Increased operational data and reports

KOMATSU CARE™

A maintenance program for Komatsu customers

Powerful and Environmentally Friendly

Higher productivity

The PC138US-11 is quick and precise. It features a powerful Komatsu EU Stage IV engine, Komatsu's Closed Center Load Sensing (CLSS) hydraulic system and first-class Komatsu comfort to provide a fast response and unrivalled productivity for its class.

Komatsu fuel-saving technology

Fuel consumption on the PC138US-11 is lower by up to 5%. Engine management is enhanced. The variable speed matching of the engine and hydraulic pumps guarantee efficiency and precision during single and combined movements.

Adjustable idle shutdown

The Komatsu auto idle shutdown automatically turns off the engine after it idles for a set period of time. This feature can easily be programmed from 5 to 60 minutes, to reduce unnecessary fuel consumption and exhaust emissions, and to lower operating costs. An Eco-gauge and the Eco guidance tips on the cab monitor further encourage efficient operations.

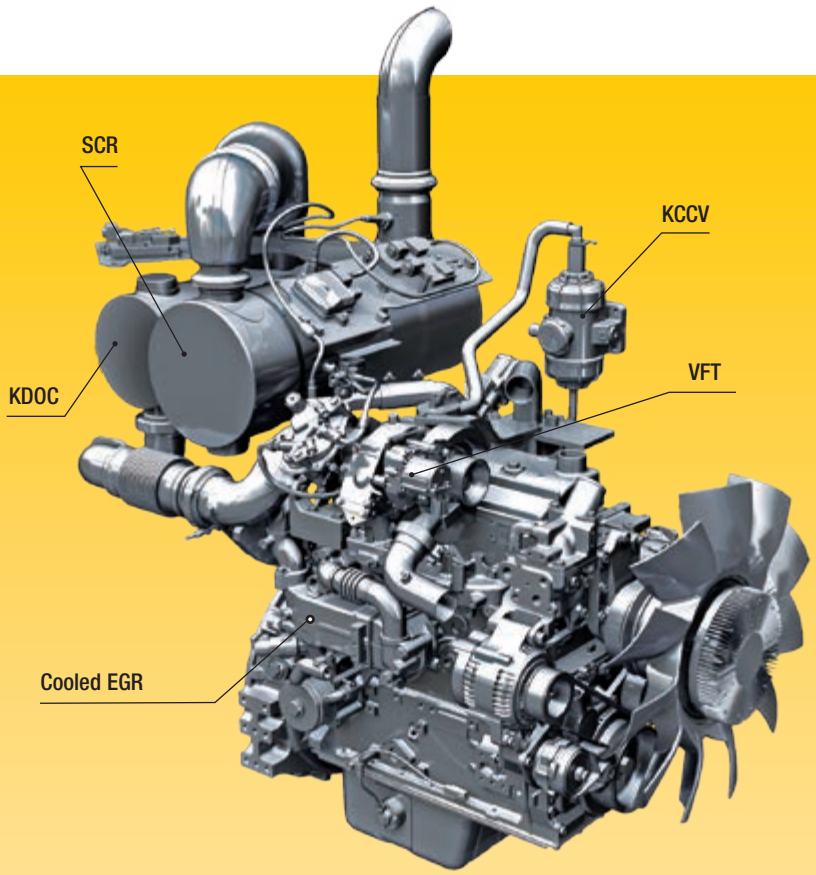

Komatsu EU Stage IV

The Komatsu EU Stage IV engine is productive, dependable and efficient. With ultra-low emissions, it provides a lower environmental impact and a superior performance to help reduce operating costs and lets the operator work in complete peace of mind.

Heavy-duty aftertreatment

The aftertreatment system combines a Komatsu Diesel Oxidation Catalyst (KDOC) and Selective Catalytic Reduction (SCR). The SCR injects the correct amount of AdBlue® into the system at the proper rate to break down NOx into water (H_2O) and non-toxic nitrogen gas (N_2).

Exhaust Gas Recirculation (EGR)
Cooled EGR is a technology well-proven in current Komatsu engines. The increased capacity of the EGR cooler now ensures very low NOx emissions and a better engine performance.

Komatsu Closed Crankcase Ventilation (KCCV)
Crankcase emissions (blow-by gas) are passed through a CCV filter. The oil mist trapped in the filter is returned back to the crankcase while the filtered gas is returned to the air intake.

High-Pressure Common Rail (HPCR)
To achieve complete fuel burn and lower exhaust emissions, the heavy duty High-Pressure Common Rail fuel injection system is computer controlled to deliver a precise quantity of pressurised fuel into the redesigned engine combustion chamber by multiple injections.

Variable Flow Turbocharger (VFT)
Varies the intake airflow. The wheel speed of the exhaust turbine is controlled by a valve for optimum air flow to the engine combustion chamber, under any load or speed conditions. The exhaust gas is cleaner, with no reduction in power or performance.

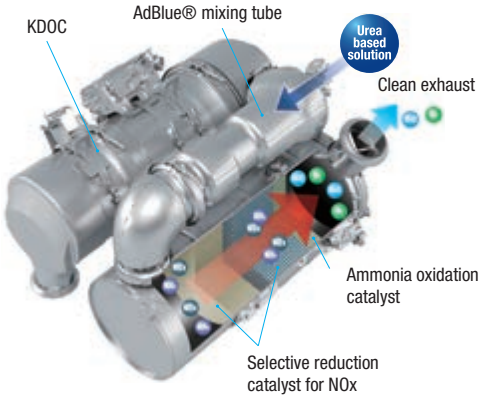

Eco-gauge, Eco guidance and fuel consumption gauge

ECO guidance record

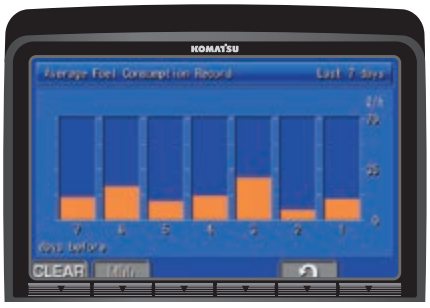

Fuel consumption history

Total Versatility

Ideal for a wide range of applications

Powerful and precise, the Komatsu PC138US-11 is equipped to efficiently carry out any task your business requires. On big sites or small, for digging, trenching, landscaping or site preparation, the Komatsu original equipment hydraulic system always ensures maximum productivity and control.

6 working modes

Power, Lifting, Breaker, Economy, Attachment Power and Attachment Economy modes are all available, ensuring that the PC138US-11 delivers the power you need with minimised fuel usage. The Economy mode can be adjusted for an ideal balance between power and economy to match your work. The oil flow delivered to hydraulic attachments is adjustable directly on the class-leading wide screen monitor panel.

A wide choice of options

With many options available – such as road-liner track shoes or a dozer blade – you can configure the PC138US-11 to match specific demands for transport, working envelope or duty.

Built-in versatility

A standard fit additional hydraulic circuit, controlled by a sliding joystick push button and a floor mounted pedal, gives the PC138US-11 excellent versatility. Ten attachment memory settings are provided, with individually definable names. In combination with the standard-fit hydraulic quick coupler power circuit, changing working style is now even simpler. A second auxiliary hydraulic line is available for attachments which require extra hydraulic actuation.

Short tail swing and exceptional stability

The PC138US-11 has a rounded profile with minimal protrusions at both the front and the rear. Its ultra-short tail swing radius is perfect for work in tight spaces, particularly in urban areas, or for road construction, logging and demolition. Thanks to optimised packaging, the PC138US-11 is exceptionally stable. Coupled with the machine's wide working range, this stability makes it ideal for any work requiring long reach, such as demolition jobs and slope cutting. With ample dumping reach available for loading operations, the operator can always work easily, efficiently and with absolute confidence.

KOMATSU
KOMATSU
KOMA

First-Class Comfort

Increased comfort

In the wide Komatsu SpaceCab™, a standard air-suspended high-back seat, heated for improved comfort and with fully adjustable armrests, is the centre of a comfortable and low-fatigue working environment. High visibility and ergonomic controls further assist to maximise the operator's productivity.

Perfect operator convenience

In addition to the standard radio, the PC138US-11 has an auxiliary input for connecting external devices and play music through the cab speakers. Two 12-volt power ports are also incorporated in the cab. Proportional controls are fitted as standard for safe and precise operation of attachments.

Low-noise design

Komatsu crawler excavators have very low external noise levels and are especially well-suited for work in confined spaces or urban areas. The optimal usage of sound insulation and of sound absorbing materials helps to make noise levels inside the cab comparable to those of an executive car.

Joysticks with proportional control button for attachments

Auxiliary input (MP3 jack) & cup holder

12 V and 24 V power supply

Information & Communication Technology

Lower operating costs

Komatsu ICT contributes to the reduction of operating costs by assisting to comfortably and efficiently manage operations. It raises the level of customer satisfaction and the competitive edge of our products.

Widescreen monitor

Conveniently customisable and with a choice of 26 languages, the widescreen monitor with simple switches and multifunction keys gives fingertip access to a large range of functions and operating info. The rear camera view and an AdBlue® level gauge are now incorporated into the default main screen.

An evolutionary interface

Helpful information is now easier than ever to find and understand with the upgraded monitor interface. An optimal main screen for the ongoing work can be selected simply by pressing the F3 key.

Quick view on the operation logs

The rear-view camera can be displayed

Operator identification function

Safety First

Optimal jobsite safety

Safety features on the Komatsu PC138US-11 comply with the latest industry standards and work in synergy to minimise risks to people in and around the machine. A neutral detection system for travel and work equipment levers increase jobsite safety, along with a seat belt caution indicator and an audible travel alarm. Highly durable anti-slip plates – with additional high friction covering – maintain long term traction performance.

Standard rear-view camera

Exceptional operator protection

Hand rails and anti-slip plates

Rear-view camera

A standard fitment camera gives you an exceptionally clear view of the rear work zone on the widescreen monitor panel. This low profile camera is integrated into the counterweight's shape and adjustable. On request, the KomVision system can be equipped.

Safe SpaceCab™

The cab is ROPS compliant with ISO 12117-2:2008. It has a tubular steel frame and provides very high shock absorbency, impact resistance and durability. The seat belt is designed to keep the operator in the safety zone of the cab in the event of a rollover. Optionally it can be fitted with an ISO 10262 Level 2 Falling Object Protective System (FOPS) with openable front guard.

Safe maintenance

Thermal guards around high temperature areas of the engine, protected fan belt and pulleys, a pump/engine partition that prevents hydraulic oil from spraying onto the engine, and exceptionally sturdy handrails: in Komatsu tradition, the highest safety level is provided for a fast and smooth maintenance.

Short tail swing radius

1,48 m – Because the tail of the PC138US-11 is more compact than conventional models, the PC138US-11 reduces the operator's need to check behind him for movement.

Short implement swing radius

1,98 m – Boom raising angle of the PC138US-11 is larger than on a conventional profile excavator, while front implement protrusion is lessened.

Safe operation in confined areas

The machine's rounded profile allows it to operate in narrow spaces or where there are a number of obstructions. The compact tail design minimises the risks of rear impact and lets the operator concentrate fully on his work.

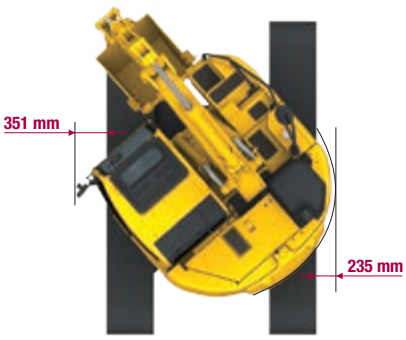

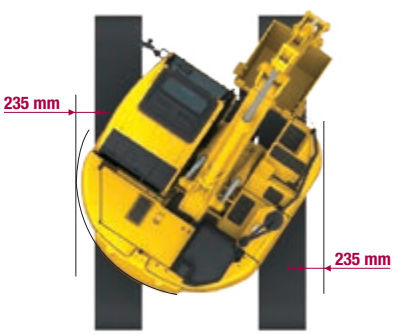

KomVision (optional)

KomVision can display a 360 degree bird's eye view representation of the machine on the standard monitor by using 3 cameras installed on the sides and rear of the machine.

Easy Maintenance

Optimum maintenance layout

Effortless access to engine-related maintenance items such as oil filter, oil dipstick, coolant reserve tank, fuel filter, and air cleaner.

Komatsu CARE™

Komatsu CARE™ is a maintenance program that comes as standard with your new Komatsu machine. It covers factory-scheduled maintenance, performed with Komatsu Genuine parts by Komatsu-trained technicians. Depending on your machine's engine, it also offers extended coverage of the Komatsu Diesel Particulate Filter (KDPF) or the Komatsu Diesel Oxidation Catalyst (KDOC), and of the Selective Catalytic Reduction (SCR). Please contact your local Komatsu distributor for terms and conditions.

Long-life oil filters

The Komatsu Genuine hydraulic oil filter uses high-performance filtering material for long replacement intervals, which significantly reduces maintenance costs.

AdBlue® tank

For simple access, the AdBlue® tank is installed on the front stairway.

Flexible warranty

When you purchase Komatsu equipment, you gain access to a broad range of programmes and services that have been designed to help you get the most from your investment. For example, Komatsu's Flexible Warranty Programme provides a range of extended warranty options on the machine and its components. These can be chosen to meet your individual needs and activities. This programme is designed to help reduce total operating costs.

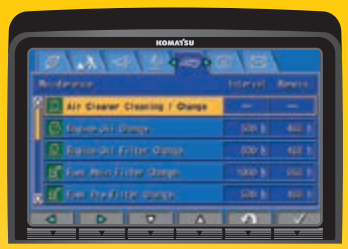

Basic maintenance screen

AdBlue® level and refill guidance

Standard water separator

KOMTRAX™

The way to higher productivity

KOMTRAX™ uses the latest wireless monitoring technology. Compatible on PC, smartphone or tablet, it delivers insightful and cost saving information about your fleet and equipment, and offers a wealth of information to facilitate peak machine performance. By creating a tightly integrated web of support it allows proactive and preventive maintenance and helps to efficiently run a business.

Knowledge

You get quick answers to basic and critical questions about your machines – what they're doing, when they did it, where they're located, how they can be used more efficiently and when they need to be serviced. Performance data is relayed by wireless communication technology (Satellite, GPRS or 3G depending on model) from the machine to a computer and to the local Komatsu distributor – who's readily available for expert analysis and feedback.

Power

The detailed information that KOMTRAX™ puts at your fingertips 24 hours a day, 7 days a week gives the power to make better daily and long-term strategic decisions – at no extra cost. Problems can be anticipated, maintenance schedules customised, downtime minimised and machines kept where they belong: working on the jobsite.

Convenience

KOMTRAX™ enables convenient fleet management on the web, wherever you are. Data is analysed and packaged specifically for effortless and intuitive viewing in maps, lists, graphs and charts. You can foresee eventual maintenance issues and required spare parts, and troubleshoot a problem before Komatsu technicians arrive on site.

Specifications

PC138US-11

ENGINE

Model	Komatsu SAA4D95LE-7
Type	Common rail direct injection, water-cooled, emissionised, turbocharged, after-cooled diesel
Engine power	
at rated engine speed	2.050 rpm
ISO 14396	72,6 kW/97,3 HP
ISO 9249 (net engine power)	72,5 kW/97,2 HP
No. of cylinders	4
Bore × stroke	95 × 115 mm
Displacement	3,26 l
Air filter type	Double element type with monitor panel dust indicator and auto dust evacuator
Cooling	Suction type cooling fan with radiator fly screen

HYDRAULIC SYSTEM

Type	HydrauMind. Closed-centre system with load sensing and pressure compensation valves
Additional circuit	1 additional circuit with proportional control can be installed
Main pump	1 variable displacement piston pump supplying boom, arm, bucket, swing and travel circuits
Maximum pump flow	242 l/min
Relief valve settings	
Implement	355 kg/cm²
Travel	355 kg/cm²
Swing	265 kg/cm²
Pilot circuit	33 kg/cm²

SERVICE REFILL CAPACITIES

Fuel tank	200 l
Radiator	16,1 l
Engine oil	11,5 l
Swing drive	2,5 l
Hydraulic tank	69 l
Final drive (each side)	2,1 l
AdBlue® tank	21,1 l

SWING SYSTEM

Type	Axial piston motor driving through planetary double reduction gearbox
Swing lock	Electrically actuated wet multidisc brake integrated into swing motor
Swing speed	0 - 11 rpm
Swing torque	33 kNm

DRIVES AND BRAKES

Steering control	2 levers with pedals giving full independent control of each track
Drive method	Hydrostatic
Gradeability	70%, 35°
Max. travel speeds	
Lo / Hi	2,9 / 5,1 km/h
Maximum drawbar pull	12.500 kg
Brake system	Hydraulically operated discs in each travel motor

UNDERCARRIAGE

Construction	X-frame centre section with box section track frames
Track assembly	
Type	Fully sealed
Shoes (each side)	43
Tension	Combined spring and hydraulic unit
Rollers	
Track rollers (each side)	7
Carrier rollers (each side)	1

ENVIRONMENT

Engine emissions	Fully complies with EU Stage IV exhaust emission regulations
Noise levels	
LwA external	99 dB(A) (2000/14/EC Stage II)
LpA operator ear	72 dB(A) (ISO 6396 dynamic test)
Vibration levels (EN 12096:1997)	
Hand/arm	≤ 2,5 m/s² (uncertainty K = 0,63 m/s²)
Body	≤ 0,5 m/s² (uncertainty K = 0,25 m/s²)
Contains fluorinated greenhouse gas HFC-134a (GWP 1430). Quantity of gas 0,8 kg, CO_2 equivalent 1,14 t	

OPERATING WEIGHT (APPR.)

	MONO BOOM		TWO-PIECE BOOM	
Triple grouser shoes	Operating weight	Ground pressure	Operating weight	Ground pressure
500 mm	13.880 kg	0,48 kg/cm²	14.980 kg	0,49 kg/cm²
600 mm	14.050 kg	0,41 kg/cm²	15.420 kg	0,43 kg/cm²
700 mm	14.230 kg	0,35 kg/cm²	15.600 kg	0,38 kg/cm²
500 mm road liner	13.990 kg	0,49 kg/cm²	15.370 kg	0,49 kg/cm²

Operating weight, including specified work equipment, 2,5 m arm, 470 kg bucket, operator, lubricant, coolant, full fuel tank and the standard equipment. Additional weight with blade: + 800 kg

Dimensions & Performance Figures

MACHINE DIMENSIONS

E	Overall height of cab	2.815 mm
F	Clearance under counterweight	900 mm
G	Ground clearance	395 mm
H	Tail swing radius	1.480 mm
I	Tumbler centre distance	2.880 mm
J	Track length	3.610 mm
K	Track gauge	1.990 mm
L	Overall track width with 500 mm shoes	2.490 mm
	Overall track width with 600 mm shoes	2.590 mm
	Overall track width with 700 mm shoes	2.690 mm
M	Shoe width	500, 600, 700 mm
N	Grouser height	20 mm
O	Machine tail height	2.140 mm
P	Overall width of upper structure	2.490 mm
Q	Distance, swing center to rear end	1.480 mm
R	Distance, swing center to blade	2.500 mm
S	Blade, max. lifting height	470 mm
T	Height of blade	590 mm
U	Blade, max. digging depth	525 mm
	Blade width (with 500 mm shoes)	2.490 mm
	Blade width (with 600 mm shoes)	2.590 mm

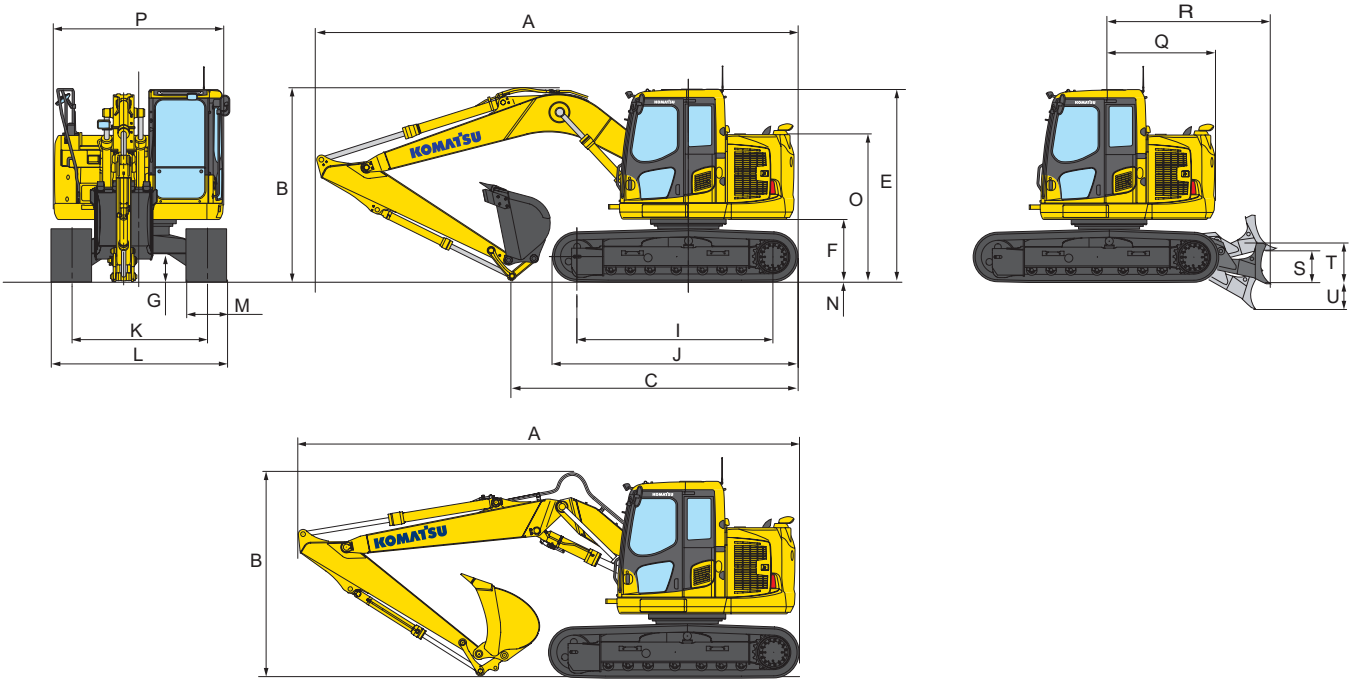

TRANSPORT DIMENSIONS

		MONO BOOM		TWO-PIECE BOOM
	Arm length	**2,5 m**	**3,0 m**	**2,5 m**
A	Transport length	7.260 mm	7.160 mm	8.100 mm
B	Overall height (to top of boom)	2.850 mm	3.210 mm	–
C	Length on ground (transport)	4.400 mm	4.290 mm	4.730 mm

Working Range

MONO BOOM

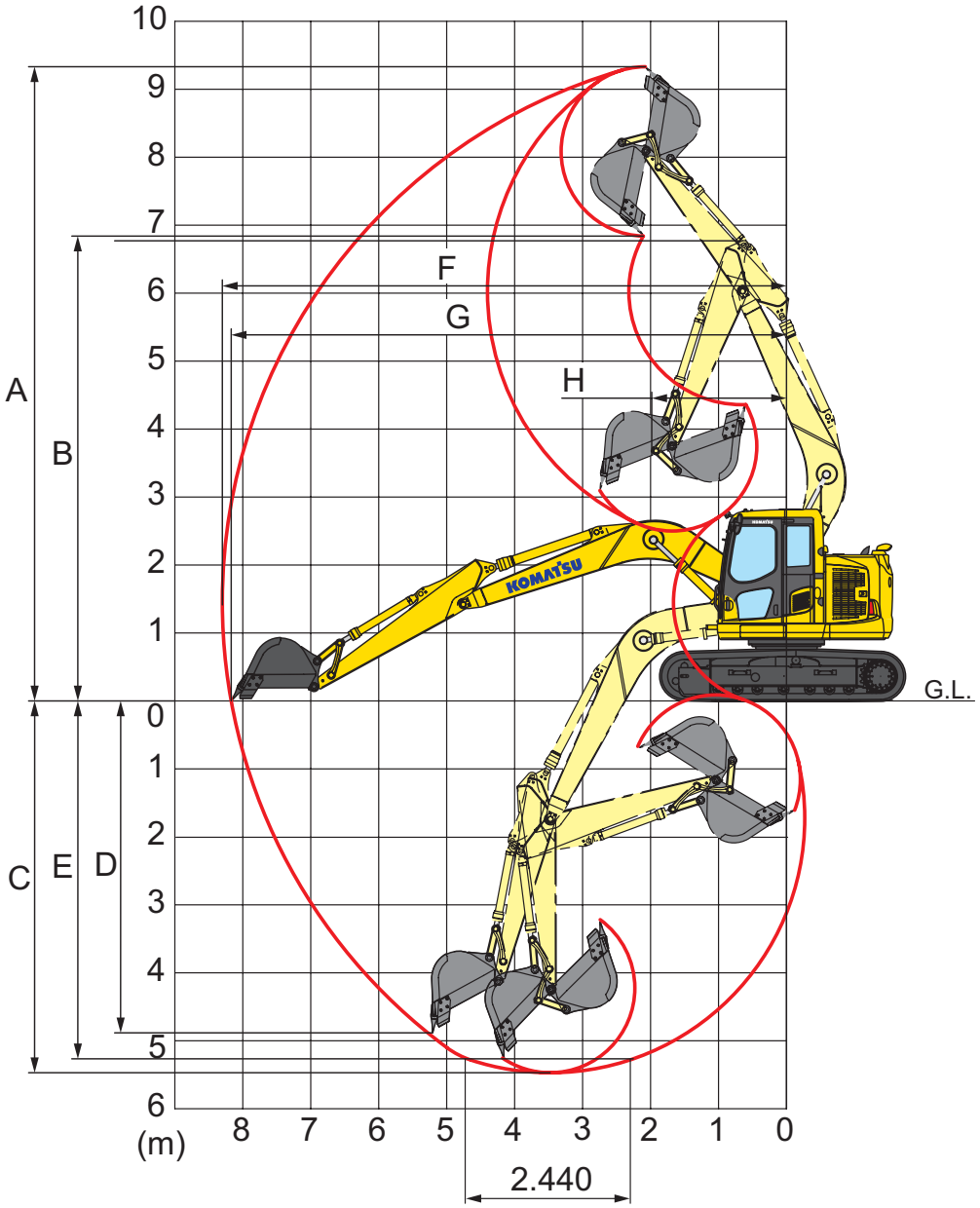

ARM LENGTH		2,5 m	3,0 m
A	Max. digging height	9.340 mm	9.700 mm
B	Max. dumping height	6.840 mm	7.350 mm
C	Max. digging depth	5.480 mm	5.900 mm
D	Max. vertical wall digging depth	4.900 mm	5.340 mm
E	Max. digging depth of cut for 2,44 m level	5.265 mm	5.715 mm
F	Max. digging reach	8.300 mm	8.720 mm
G	Max. digging reach at ground level	8.180 mm	8.600 mm
H	Min. swing radius	1.980 mm	2.265 mm
	Bucket digging force (ISO)	9.316 daN	9.316 daN
	Arm crowd force (ISO)	6.178 daN	5.590 daN

TWO-PIECE BOOM

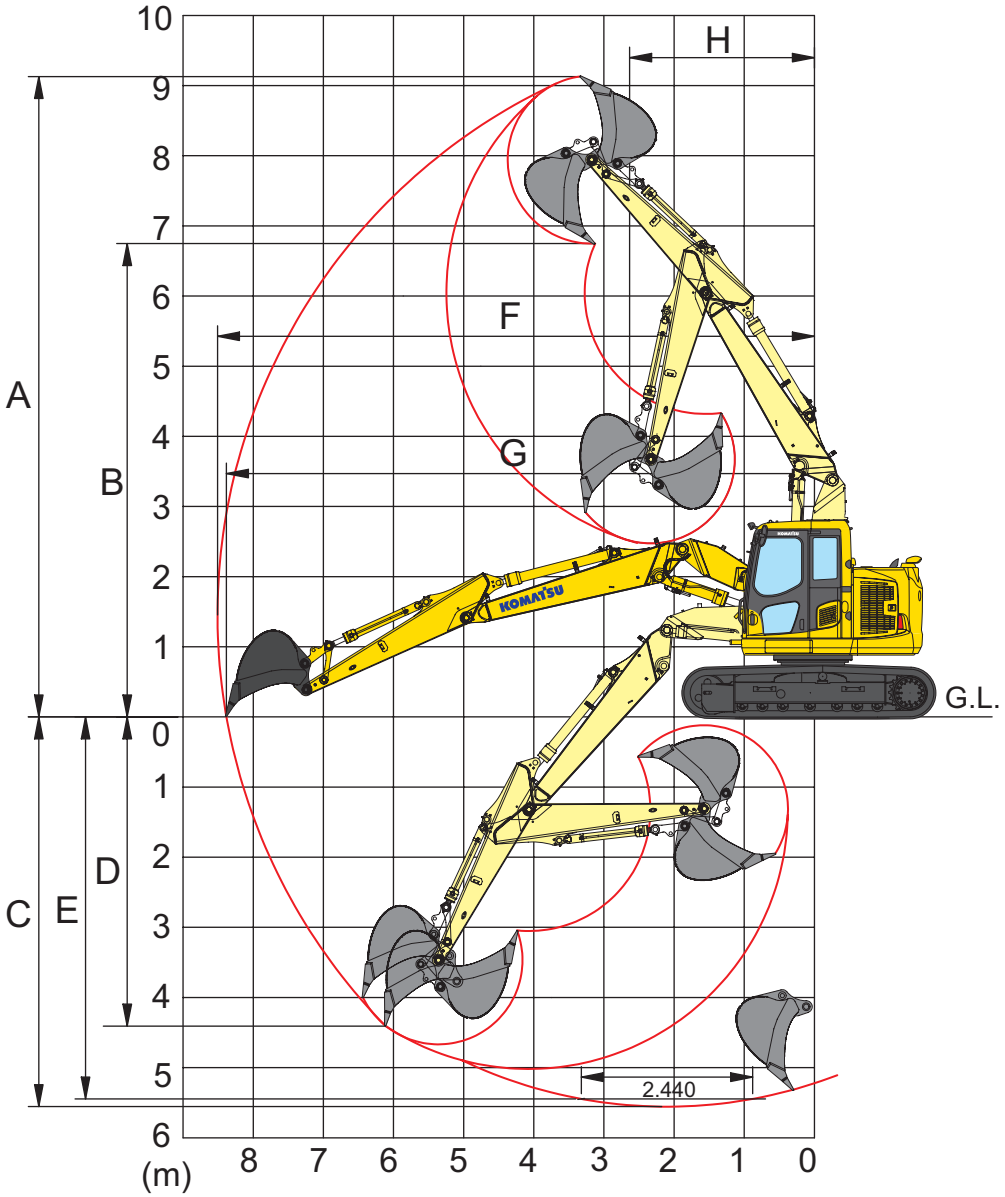

ARM LENGTH		2,5 m
A	Max. digging height	9.130 mm
B	Max. dumping height	6.750 mm
C	Max. digging depth	5.680 mm
D	Max. vertical wall digging depth	4.400 mm
E	Max. digging depth of cut for 2,44 m level	5.570 mm
F	Max. digging reach	8.510 mm
G	Max. digging reach at ground level	8.380 mm
H	Min. swing radius	2.500 mm
	Bucket digging force (ISO)	9.140 daN
	Arm crowd force (ISO)	6.060 daN

Lifting Capacity

PC138US-11

MONO BOOM

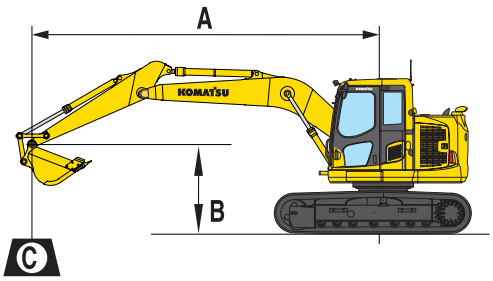

A – Reach from swing center

B – Bucket hook height

C – Lifting capacities, including bucket (400 kg), bucket linkage and bucket cylinder

– Rating over front

– Rating over side

– Rating at maximum reach

When removing bucket, linkage or cylinder, lifting capacities can be increased by their respective weights

With 500 mm shoes

Arm length	A / B		7,0 m		6,0 m		4,5 m		3,0 m		1,5 m	
3.000 mm 400 kg 0,5 m³	6,0 m	kg	*1.340	*1.340			*1.870	*1.870	*2.670	*2.670		
	4,5 m	kg	*1.250	*1.250	*1.600	1.430	*2.680	1.950	*2.840	*2.840		
	3,0 m	kg	*1.250	1.170	2.250	1.400	2.950	1.870	*3.760	3.090	*3.740	*3.740
	1,5 m	kg	*1.330	1.090	2.180	1.340	2.830	1.760	4.580	2.840	*7.560	5.440
	0,0 m	kg	*1.500	1.100	2.120	1.280	2.720	1.660	4.330	2.620	*6.480	4.930
	-1,5 m	kg	*1.810	1.200	2.080	1.250	2.650	1.600	4.200	2.500	*6.220	4.760
	-3,0 m	kg	2.460	1.490			2.660	1.600	4.180	2.490	*6.480	4.780
	-4,5 m	kg	*2.920	2.290					*3.500	2.590	*5.500	4.950

2.500 mm 400 kg 0,5 m³	6,0 m	kg	*1.650	*1.650					*3.100	*3.100		
	4,5 m	kg	*1.540	*1.540			*2.850	1.920	*3.570	3.210		
	3,0 m	kg	*1.550	1.340	*1.970	1.390	2.930	1.860	*4.360	3.040	*5.880	*5.880
	1,5 m	kg	*1.660	1.250	2.180	1.340	2.830	1.770	4.540	2.820	*7.430	5.310
	0,0 m	kg	*1.910	1.260	2.140	1.300	2.740	1.680	4.340	2.640	*6.090	4.940
	-1,5 m	kg	2.310	1.410			2.700	1.640	4.250	2.560	*6.070	4.860
	-3,0 m	kg	2.940	1.800					4.270	2.570	*6.540	4.920
	-4,5 m	kg										

											*4.370	*4.370
											*5.750	*5.750

* Load is limited by hydraulic capacity rather than tipping. Ratings are based on SAE Standard No. J1097. Rated loads do not exceed 87% of hydraulic lift capacity or 75% of tipping load. Lifting capacity stated is based on lifting with bare arm. When lifting with additional equipment installed to the arm, please subtract the weight of all additional equipment from the values stated.

TWO-PIECE BOOM

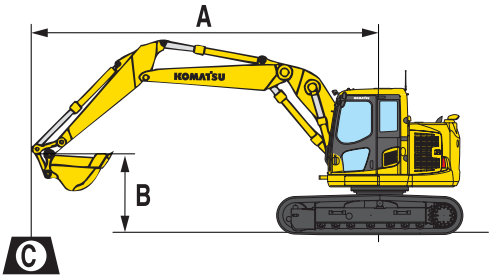

A – Reach from swing center

B – Bucket hook height

C – Lifting capacities, including bucket (400 kg), bucket linkage and bucket cylinder

– Rating over front

– Rating over side

– Rating at maximum reach

When removing bucket, linkage or cylinder, lifting capacities can be increased by their respective weights

With 500 mm shoes

Arm length	A				7,5 m		6,0 m		4,5 m		3,0 m		1,5 m	
	B													
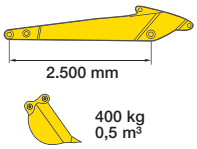 2.500 mm 400 kg 0,5 m³	7,5 m	kg	*2.500	*2.500										
	6,0 m	kg	*2.050	*2.050					*3.100	*3.100				
	4,5 m	kg	*1.900	1.550			2.750	2.050	*3.350	*3.350				
	3,0 m	kg	1.800	1.300			2.700	1.950	*4.100	3.250	*5.850	*5.850		
	1,5 m	kg	1.700	1.200	1.700	1.200	2.550	1.850	4.200	3.000				
	0,0 m	kg	1.700	1.200	1.700	1.200	2.450	1.750	4.000	2.800				
	-1,5 m	kg	1.900	1.350			2.400	1.700	3.900	2.700	*7.500	4.600		
	-3,0 m	kg	2.400	1.700			2.450	1.700	3.900	2.700	*7.450	5.300		
	-4,5 m	kg												

* Load is limited by hydraulic capacity rather than tipping. Ratings are based on SAE Standard No. J1097. Rated loads do not exceed 87% of hydraulic lift capacity or 75% of tipping load. Lifting capacity stated is based on lifting with bare arm. When lifting with additional equipment installed to the arm, please subtract the weight of all additional equipment from the values stated.

Standard and Optional Equipment

PC138US-11

ENGINE

Komatsu SAA4D95LE-7 turbocharged common rail direct injection diesel engine	●
EU Stage IV compliant	●
Automatic engine warm-up system	●
Engine overheat prevention system	●
Fuel control dial	●
Auto-deceleration function	●
Engine key stop	●
Engine ignition can be password secured on request	●
Alternator 24 V/35 A	●
Starter motor 24 V/4,5 kW	●
Batteries 2 × 12 V/72 Ah	●

HYDRAULIC SYSTEM

Electronic closed-centre load sensing (E-CLSS) hydraulic system (HydrauMind)	●
Pump and engine mutual control (PEMC) system	●
6-working mode selection system; power mode, economy mode, breaker mode, attachment power and attachment economy mode, and lifting mode	●
Adjustable PPC wrist control levers for arm, boom, bucket and swing, with sliding proportional control for attachments and 3 auxiliary buttons	●
Prepared for hydraulic quick-coupler	●
One additional hydraulic circuit (HCU-C)	○

DRIVES AND BRAKES

Hydrostatic, 2-speed travel system with automatic shift and planetary gear type final drives, and hydraulic travel and parking brakes	●
PPC control levers and pedals for steering and travel	●

UNDERCARRIAGE

Track frame under-guards	●
500 mm triple grouser shoes	●
600, 700 mm triple grouser shoes	○
500 mm road-liner (rubber) shoes	○
Additional track guiding guard	○

CABIN

Reinforced safety SpaceCab™; highly pressurised and tightly sealed hyper viscous mounted cab with tinted safety glass windows, large roof window, pull-up type front window with locking device, removable lower window, front window wiper with intermittent feature, luggage shelf, floor mat	●
Heated, high back air suspension seat with lumbar support, console mounted height adjustable arm rests, and retractable seat belt	●
Automatic climate control system	●
12/24 Volt power supplies	●
Beverage holder and magazine rack	●
Hot and cool box	●
Radio	●
Auxiliary input (MP3 jack)	●
Lower wiper	●
Rain visor (not with OPG)	●

SERVICE AND MAINTENANCE

Automatic fuel line de-aeration	●
Double element type air cleaner with dust indicator and auto dust evacuator	●
KOMTRAX™ – Komatsu wireless monitoring system	●
Multi-function video compatible colour monitor with Equipment Management and Monitoring System (EMMS) and efficiency guidance	●
Toolkit	●
Komatsu CARE™	●

WORK EQUIPMENT

Mono boom	○
Two-piece boom	○
2,5 m arm	○
3,0 m arm (only with mono boom)	○
Dozer blade (with 500 or 600 mm shoes)	○
Komatsu buckets	○
Komatsu breakers	○

SAFETY EQUIPMENT

Rear view camera	●
Electric horn	●
Overload warning device	●
Audible travel alarm	●
Boom safety valves	●
Large handrails, rear-view mirrors	●
Battery main switch	●
ROPS compliant to ISO 12117-2:2008	●
Emergency engine stop switch	●
Arm safety valve	●
KomVision surround view system	○
OPG Level II front guard (FOPS)	○
OPG Level II top guard (FOPS)	○

LIGHTING SYSTEM

Working lights: 1 boom (l.h.), 1 cab (lower), 4 cab roof (front), 1 cab roof (rear), 1 counterweight (rear), beacon	●

OTHER EQUIPMENT

Remote greasing for swing circle and pins	●
Electric refuelling pump with automatic shut off function	●
Standard colour scheme and decals	●
Parts book and operator manual	●
Additional counterweight 500 kg	○
Bucket linkage with lifting pin	○
Biodegradable oil for hydraulic system	○

Further equipment on request

● standard equipment
○ optional equipment

Your Komatsu partner:

Komatsu Europe International N.V.
Mechelsesteenweg 586
B-1800 VILVOORDE (BELGIUM)
Tel. +32-2-255 24 11
Fax +32-2-252 19 81
www.komatsu.eu

WENSS07902 02/2017

KOMATSU is a trademark of Komatsu Ltd. Japan.

Printed in Europe – This specification sheet may contain attachments and optional equipment that are not available in your area.
Please consult your local Komatsu distributor for those items you may require. Materials and specifications are subject to change without notice.
AdBlue® is a registered trademark of Verband der Automobilindustrie e.V.